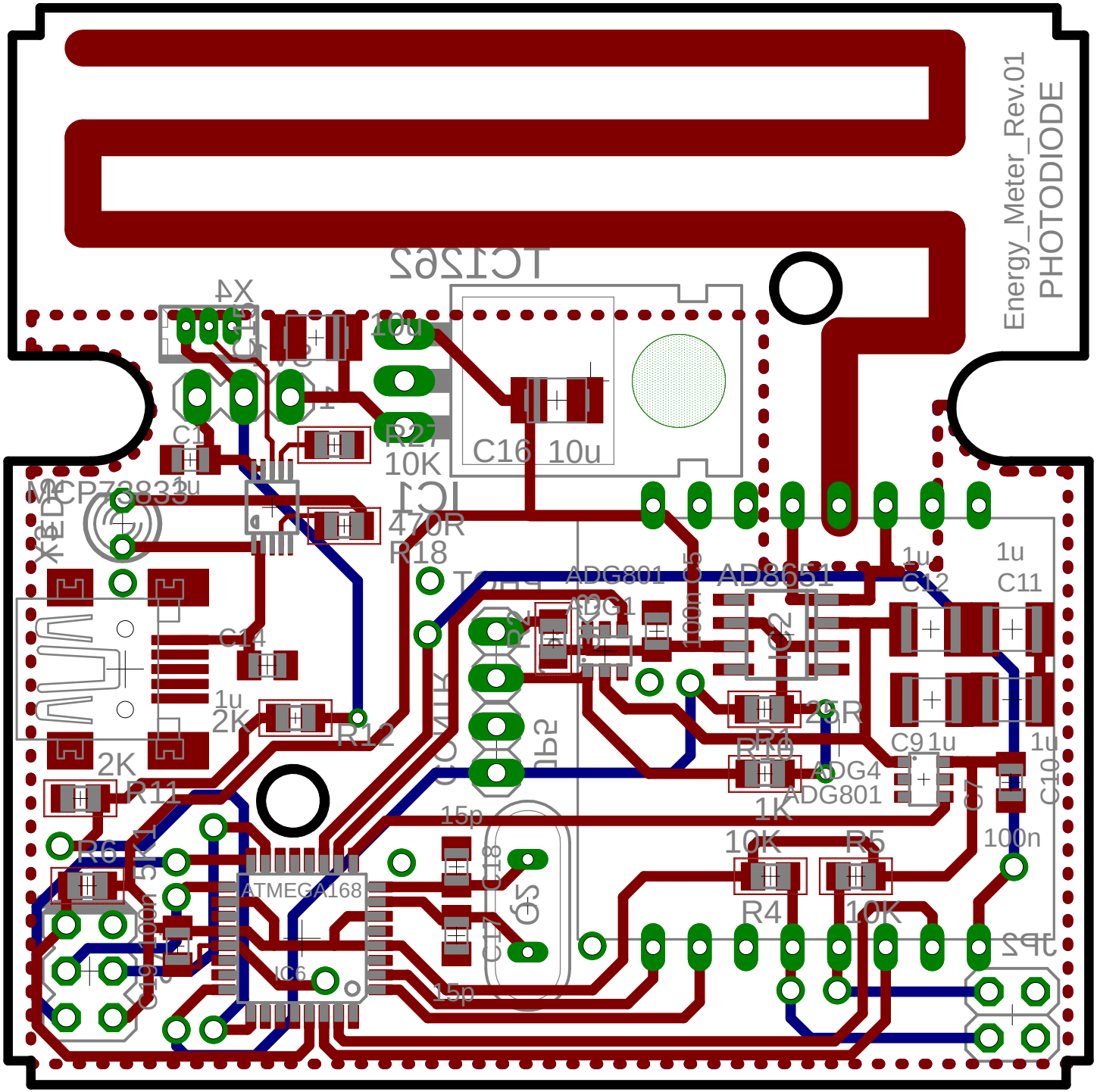

24/09/2013 12:18:40 f=3.20 Z:\projects\Energy_meter_Eagle6\Rev.01\Energy_meter_photodiode\Energy_meter.brd