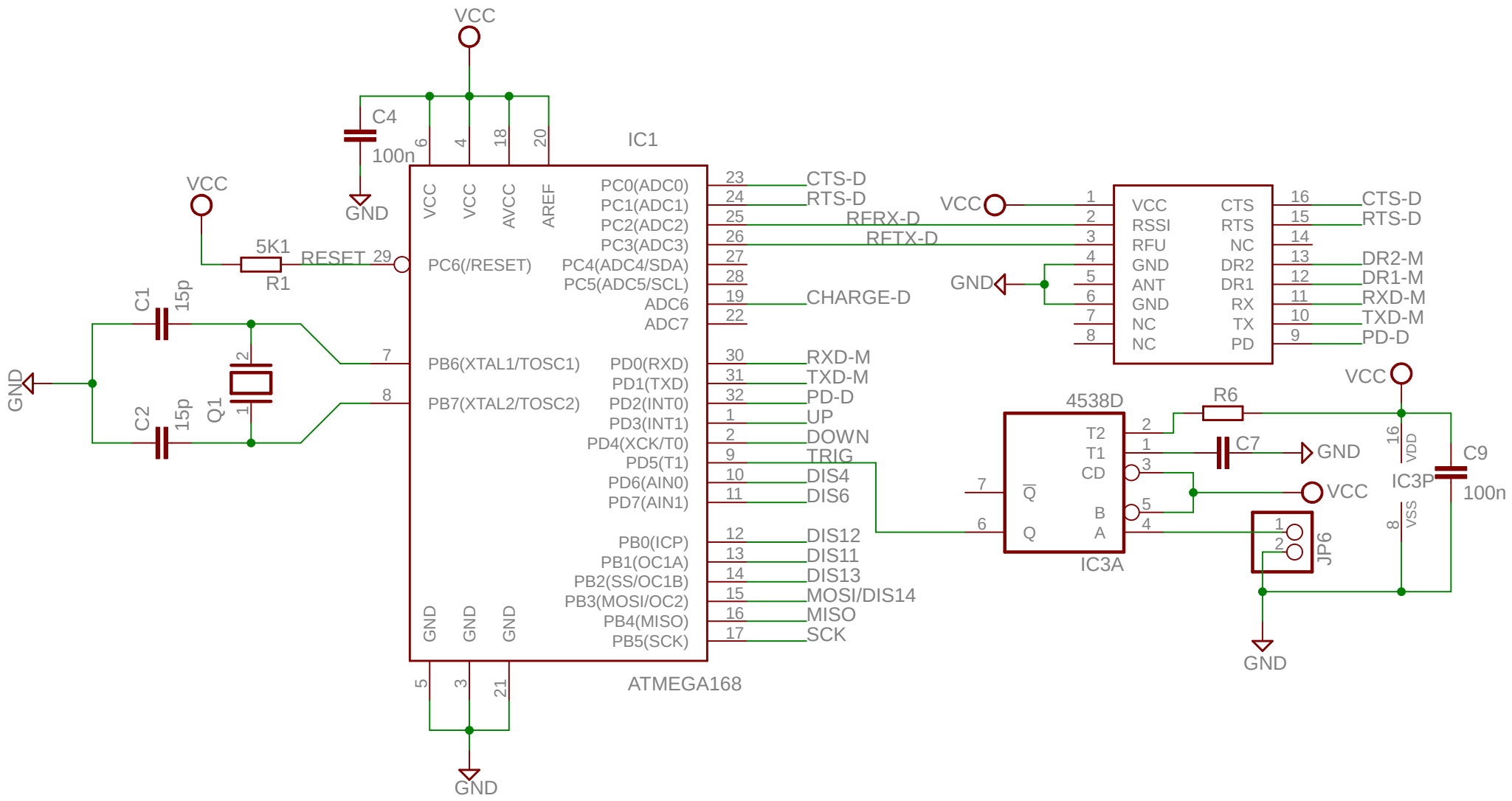

24/09/2013 12:17:03 f=1.40 Z:\projects\Energy_meter_Eagle6\Rev.01\Energy_meter_display\Energy_meter.sch (Sheet: 1/2)
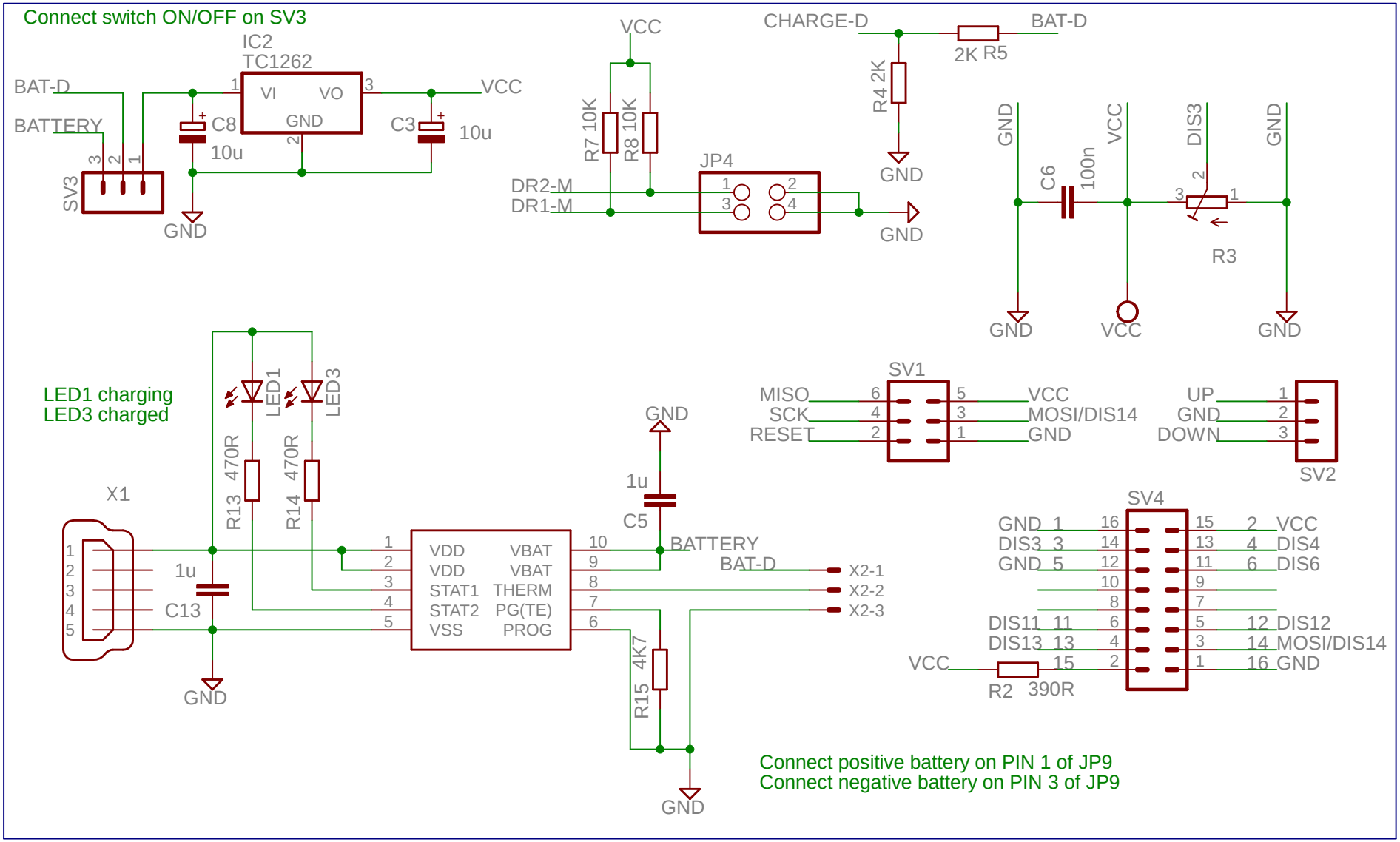
POWER SUPPLY DISPLAY